E77

EXTRUDED ALUMINIUM SECURITY SHUTTER :: TECHNICAL DATASHEET 9

Extruded aluminium security shutter suitable for domestic, retail & commercial sites, up to 25m².
Punched (V77) or Perforated (P77) profile slats can be incorporated as required for full or partial vision and airflow.

Note: the E77 can be upgraded to an ‘E77 Elite’ insurance approved shutter, certified and tested by the LPCB, rated B3 (SR2) LPS 1175: Issue 8.







APPLICATIONS

The E77 is suitable for commercial sites & shop-front applications, up to 25m². The E77 can be upgraded to insurance approved Secured by Design shutter, meeting LPCB LPS1175, issue 8 standard to B3 (SR2).
Punched (V77) or Perforated (P77) profile slats can be incorporated as required for full or partial vision. Suitable for internal or external face or reveal fit.

CURTAIN SLAT

A 77mm double-skinned extruded aluminium slat.

Finish: White, Black or Anthracite as standard.

Option to powder coat any RAL / BS colour (surcharge applies).

Visible Face:	77mm
Weight per m²:	8.5kg
Maximum Width:	6500mm
Maximum Area:	25m²
Maximum Height:	5000mm
Guide Width:	70mm, 90mm or 150mm (availabe on request)

ENCLOSURE

Roll-formed aluminium box with pressure-moulded aluminium alloy end plates.

Finish: White, Anthracite & Black as standard. Option to powder coat any RAL / BS colour (surcharge applies).

Guide Height (mm)	Plate Size (mm)
1750	250
2850	300
4000	360

Plate sizes shown as a guide only and may vary .

BOTTOM SLAT

Extruded aluminium bottom slat with weather seal.

GUIDE CHANNELS

Extruded aluminium guide channels with brush inserts. Width of 70mm or 90mm (150mm available on request)

Finish: White, Anthracite & Black as standard.
Option to powder coat any RAL / BS colour (surcharge applies).

OPERATION

Electric: Somfy tubular motor as standard. Safety brake as appropriate to comply with legislation. Manual override facility & crank handle as required (surcharge applies). Push button operation as standard, with numerous control option varients such as key switch, remote and group or mobile phone activation.
Manual Spring & Lock: Manual operation is available but not common as the shutter tends to be used to cover large openings.

CE compliant to all applicable directives and standards.

E77

EXTRUDED ALUMINIUM SECURITY SHUTTER :: TECHNICAL DATASHEET 9

FRONT FACE

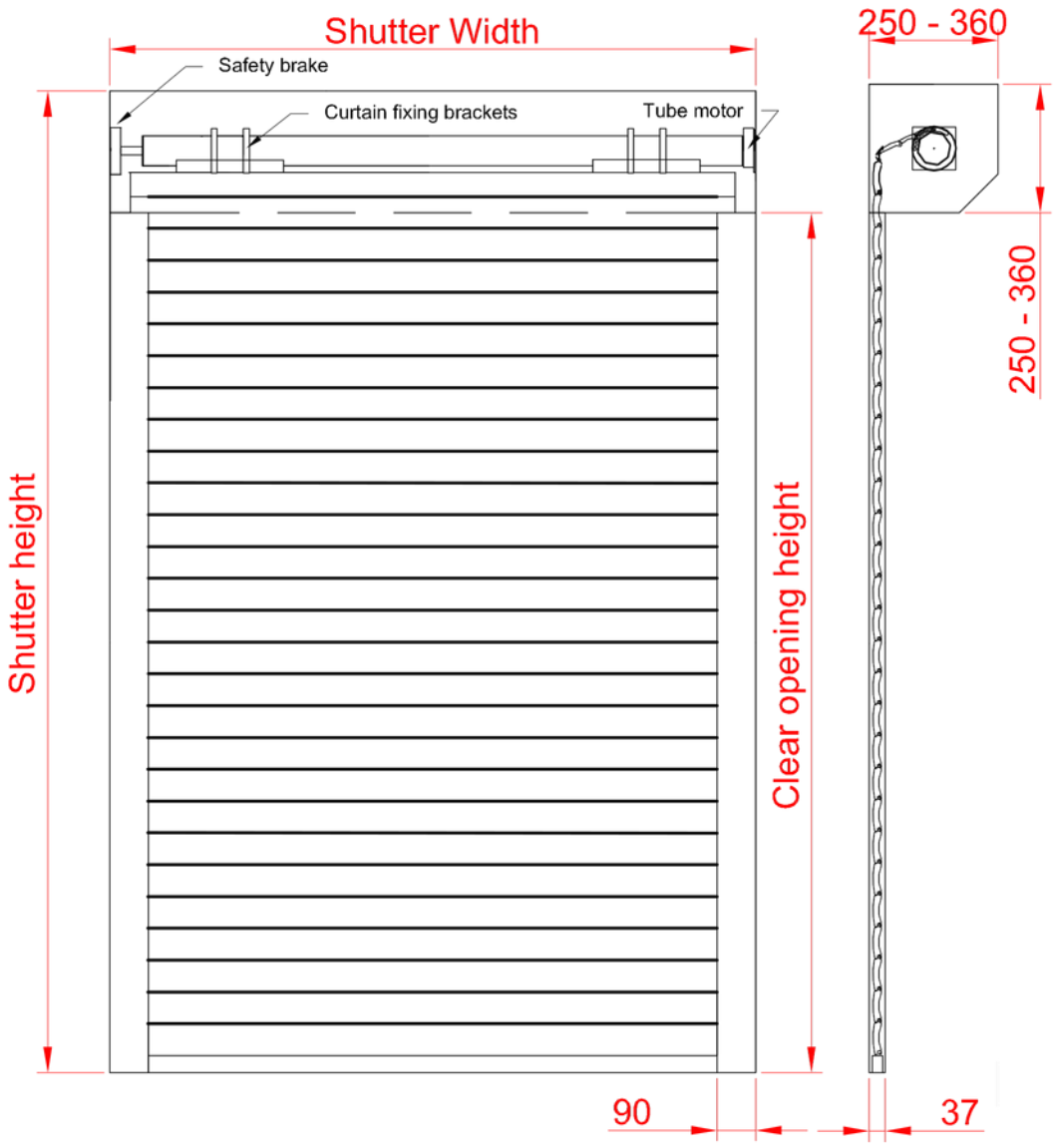

FIXING DETAIL

FACE FIX

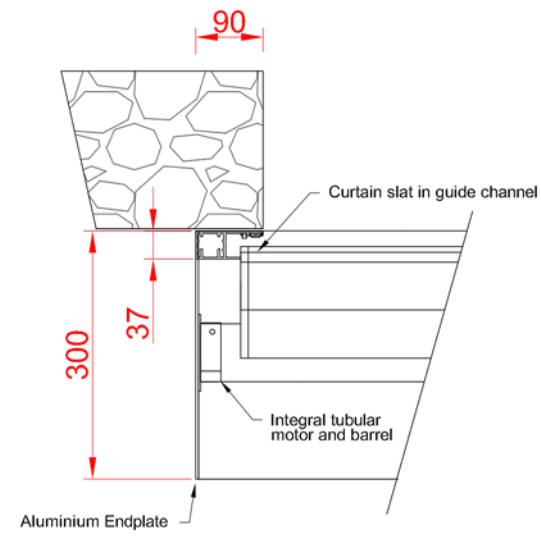

REVEAL FIX

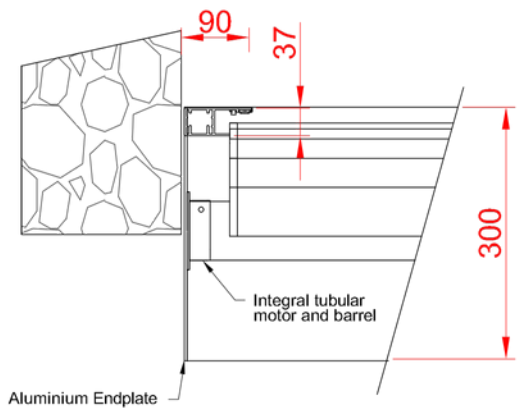

SLAT PROFILE

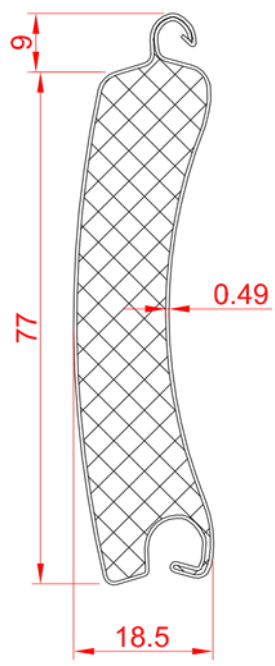

GUIDE CHANNELS

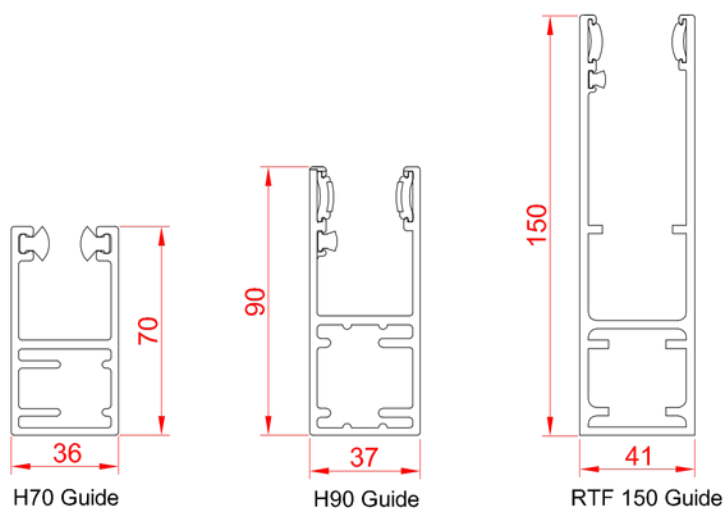

Manufactured by Aluroll Ltd, Unit 12 Artillery Business Park, Garrison Avenue, Park Hall, Oswestry, Shropshire, SY11 4AD
Tel: 0800 977 8975 | www.aluroll.co.uk

NOV 2026