S76

STEEL SECURITY SHUTTER : TECHNICAL DATASHEET 11

A medium - high security shutter suitable for retail & commercial sites. A 76mm solid steel slat with a galvanised finish as standard. The shutter can be powder coated and plastisol finished (surcharge applies). Suitable for internal or external face or reveal fit.
The S76 is a solid profile that can be used in conjunction with the punched (V76) or perforated (P76) slats to form a shutter with increased visibility and airflow.



APPLICATIONS
Medium-high security shutter solution for reail and industrial sites, for openings up to 60m². Internal or external face or reveal fit.
Punched (V76) & Perforated (P76) slats can be incorporated as required for full or partial vision.

CURTAIN SLAT
76mm single skin galvanised solid steel slat.
Slats can be; 22 gauge (0.7mm), 20 gauge (0.9mm), or 18 gauge (1.2mm), depending on overall shutter opening width.

Finish: Galvanised finish as standard.
Option to powder coat any RAL / BS colour or to choose from a range of plastisol finishes (surcharges apply).

Visible Face:	76mm
Weight per m²:	9.08kg - 15.31kg (depending on profile gauge)
Maximum Width:	10,000mm
Maximum Area:	60m²
Maximum Height:	6000mm
Guide Width:	65mm as standard 100mm wind lock guide available on request

BOX
Mild steel end plates as standard with optional casing / fascia depending on fit type.
N.B. Reveal fix installations are supplied with a fascia as standard.

Finish: Galvanised finish as standard.
Option to powder coat any RAL / BS colour (surcharges apply).

Guide Height (mm)	Plate Size (mm)
2695	305
4000	355
5000	400

*These sizes apply to standard shutter roll methods only.
Reverse rolled curtains will require larger casings than those shown. Plate sizes shown as a guide only and may increase dependent on shutter width.
Note: Outboard motors are generally larger than the plate itself.

BOTTOM SLAT
'T' shaped bottom rail as standard. 'L' shaped bottom rail available as an optional extra.

GUIDE CHANNELS
Galvanised steel guide channels.
Width of 65mm guides or 100mm wind lock guide available on request.

Finish: Galvanised finish as standard. Option to powder coat any RAL / BS colour (surcharge applies).

OPERATION
Tubular Motor: Powered by an Aluroll tubular motor with manual override facility, allowing operation in the event of a power failure.
Supplied as standard with a choice of rocker switch or key switch controls. Alternative operating options are available, including wireless switches, hand-held transmitters and Building Management Systems (BMS) integration.
A safety break is fitted to ensure compliance with current legislation.
For larger applications, a GfA Safedrive three-phase motor with integrated safety break, chain-operated manual override and push-button control station is supplied as standard. Single-phase motor solutions are also available on request.
Inboard Motor: GfA Ranger single or three phase motor with separate safety break, chain-operated manual override and push-button control station as standard.
Inline Motor: Aluroll single phase inline chain driven motor with push-button control and chain override.

S76

STEELSECURITY SHUTTER : TECHNICAL DATASHEET 11

DIRECT DRIVE MOTOR

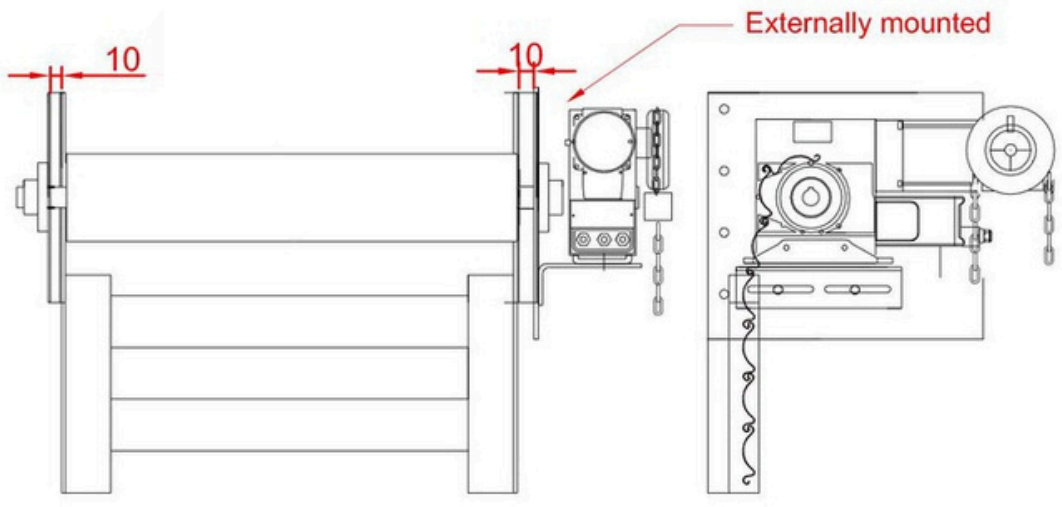

FIXING DETAIL

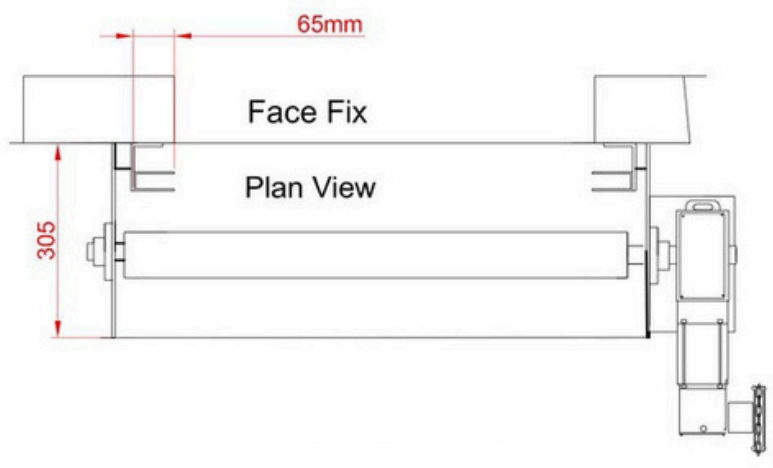

iNBOARD MOTOR

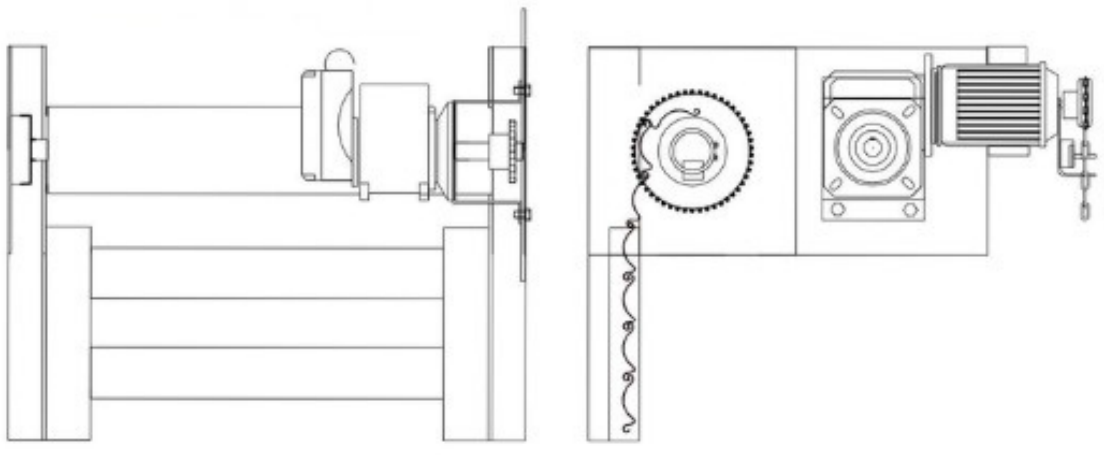

FIXING DETAIL

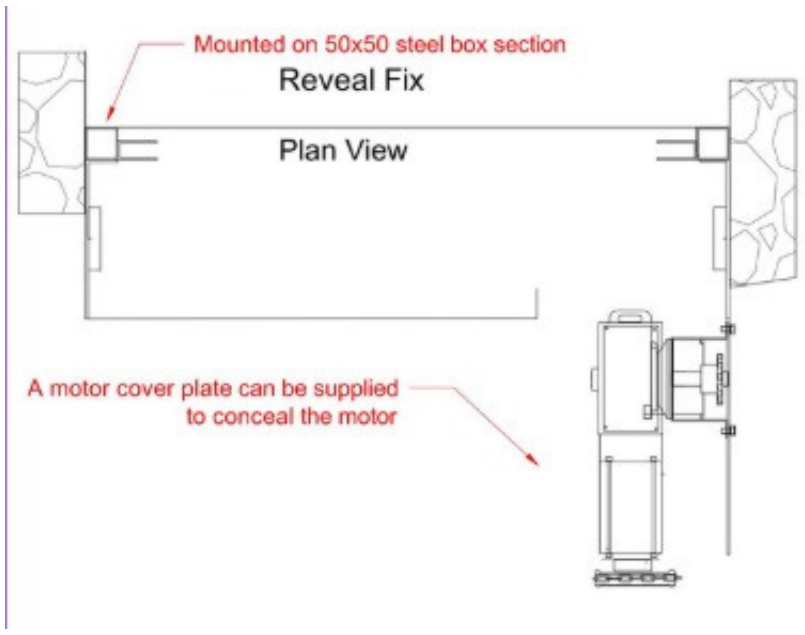

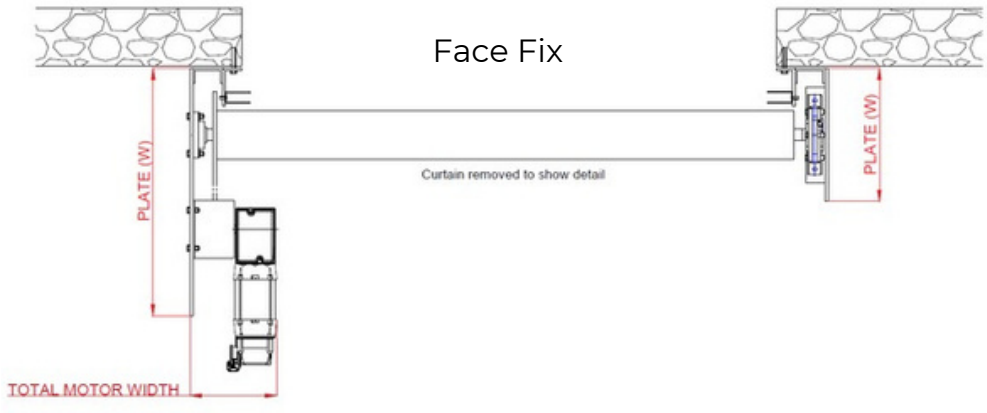

Manufactured by Aluroll Ltd, Unit 12 Artillery Business Park, Garrison Avenue, Park Hall, Oswestry, Shropshire, SY11 4AD
Tel: 0800 977 8975 | www.aluroll.co.uk

NOV 2026

S76

STEELSECURITY SHUTTER :: TECHNICAL DATASHEET 12

TUBULAR MOTOR

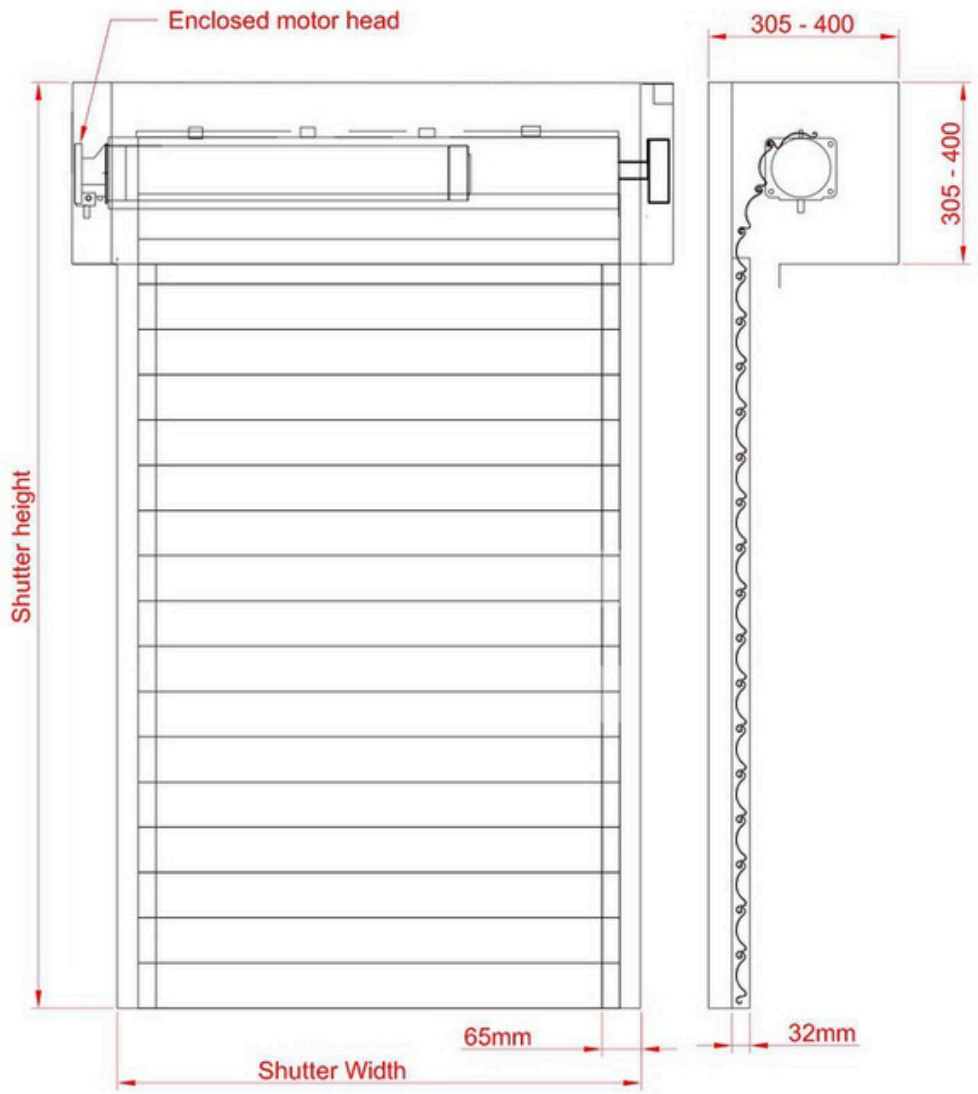

FIXING DETAIL

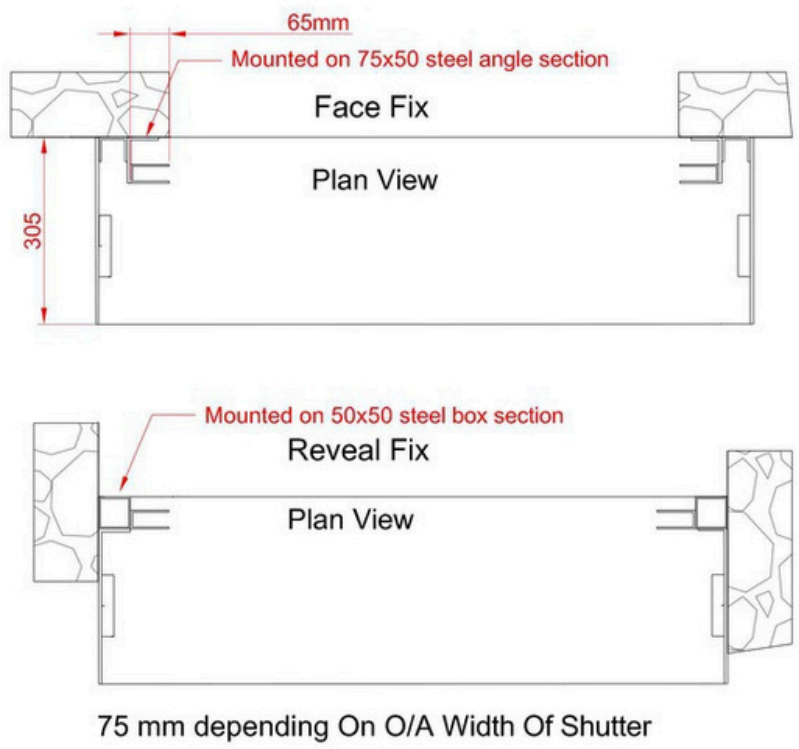

75 mm depending On O/A Width Of Shutter

SLAT PROFILE

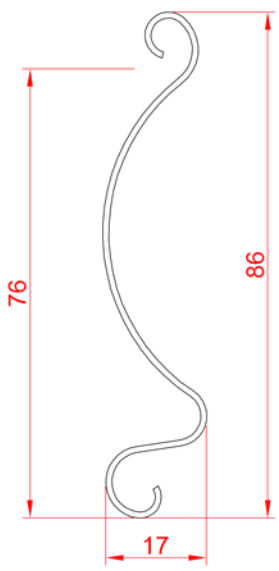

GUIDE CHANNELS

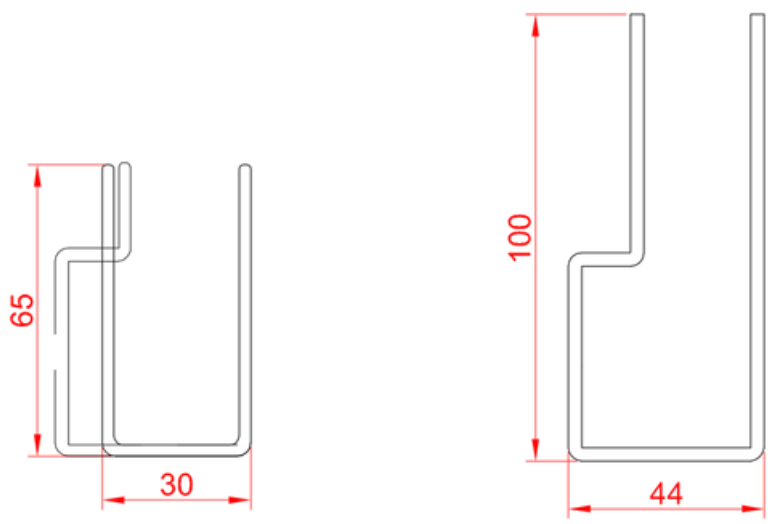

Manufactured by Aluroll Ltd, Unit 12 Artillery Business Park, Garrison Avenue, Park Hall, Oswestry, Shropshire, SY11 4AD
Tel: 0800 977 8975 | www.aluroll.co.uk

NOV 2026